SPECIFICATION APPLIED

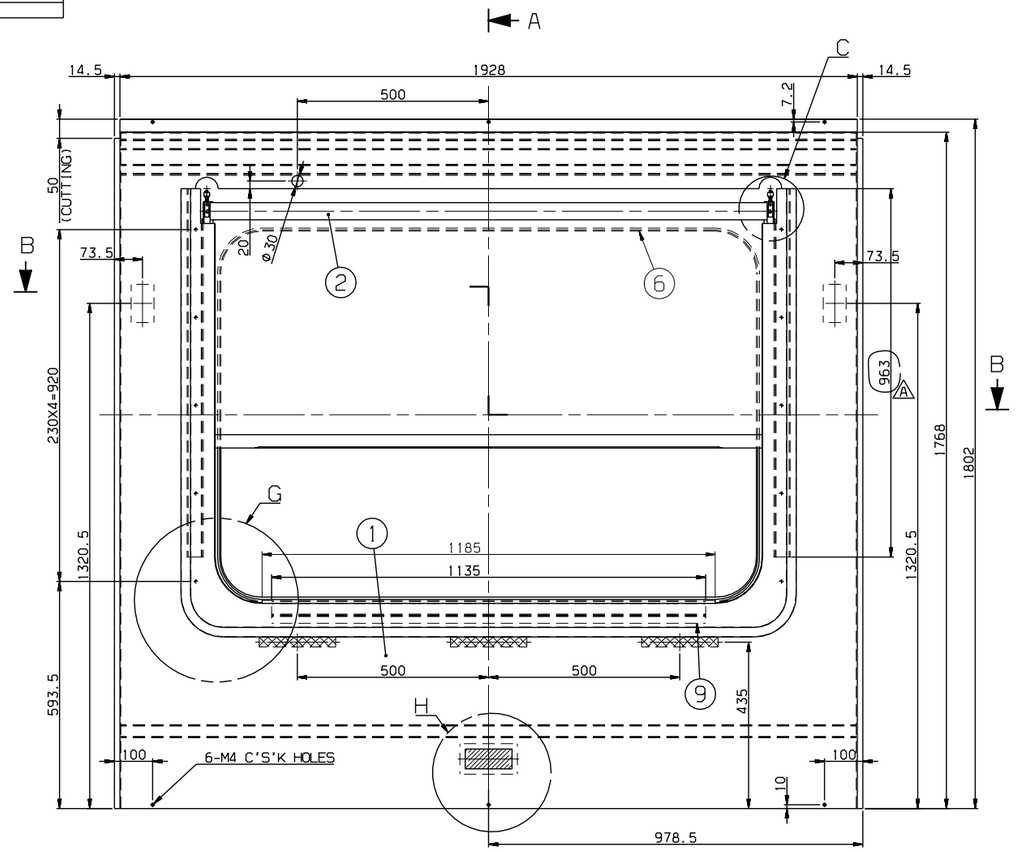

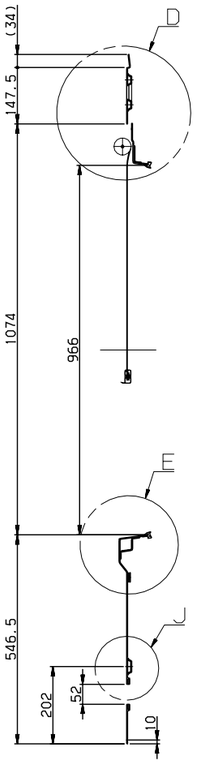

SECTION A-A

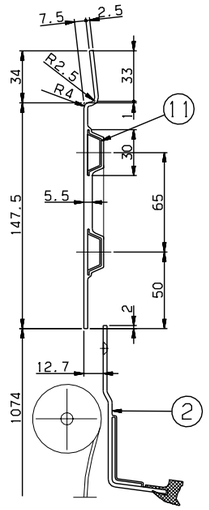

DETAIL D
SCALE=1/2

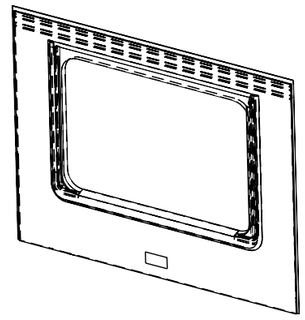

ISO VIEW

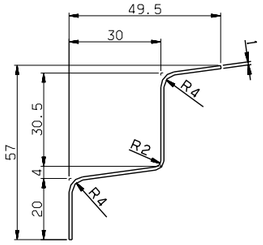

DETAIL #9
SCALE=1/1

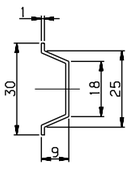

DETAIL #11
SCALE=1/1

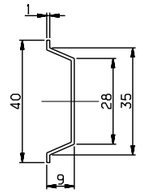

DETAIL #10
SCALE=1/1

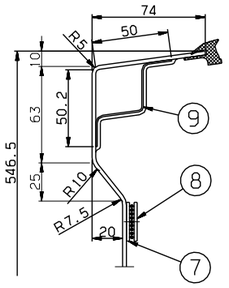

DETAIL E
SCALE=1/2

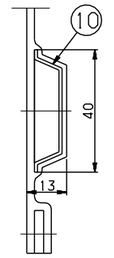

DETAIL J
SCALE=1/1

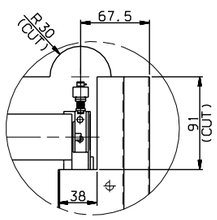

DETAIL C
SCALE=1/3

NOTE

1. AN INTERIOR PANEL'S COLOR(RAL 7047) AND SURFACE SHALL BE MANUFACTURED AFTER SAMPLE'S APPROVAL BY CUSTOMER
2. PART 6 SHALL BE CUT ADEQUATELY AND USED
3. PART 2 SHALL BE WELL OPERATED UNDER CONDITION OF ASSEMBLY
4. PART 7 SHALL BE FIXED ON THE PART 1, AND PART 8 SHALL BE DELIVERED SEPERATETLY
5. THE INTERFACE BETWEEN PART 1 AND PART 2 SHALL BE STRONGLY SEALED
6. PART 4 SHOULD BE APPLIED WITH PART 13.

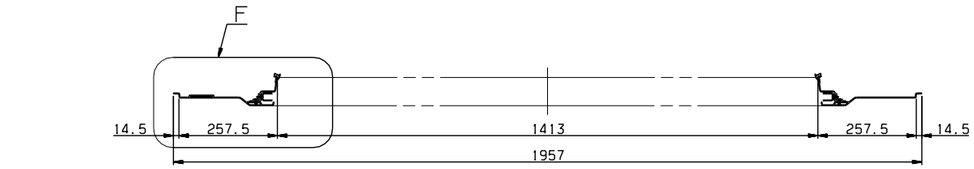

SECTION B-B

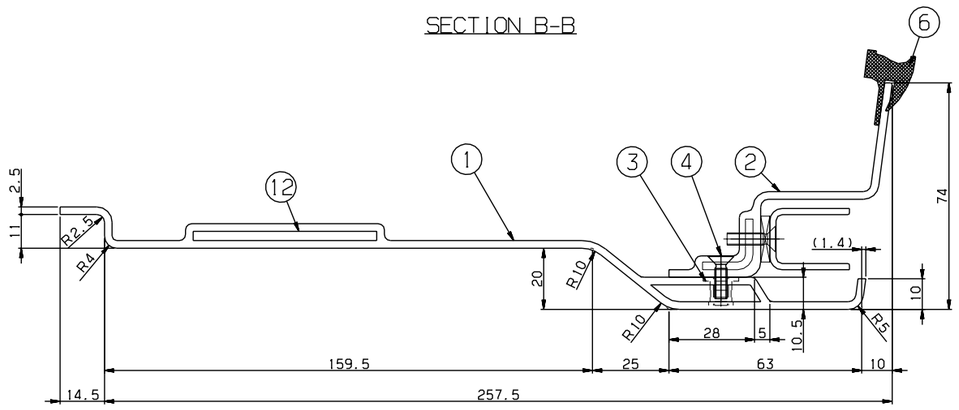

DETAIL F
SCALE=1/1

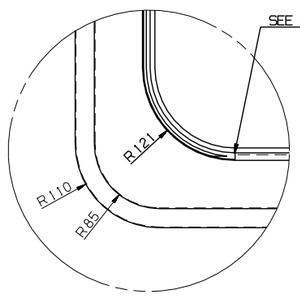

DETAIL G
SCALE=1/4

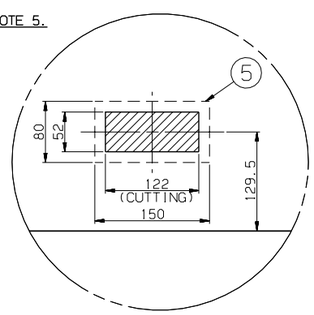

DETAIL H
SCALE=1/4

	NO.	PART NO.	DESCRIPTION	MATERIAL	Q'TY	W.T	REMARKS
A	13	CP910004-406	ADHESIVE	ASSY	1		LOCTITE 242
	12	RFP51191EJ0-012	SEAT,TAP	SUS304	2		PL T3x60x100
	11	RFP51191EJ0-011	STIFFENER	A1050P	2		T1
	10	RFP51191EJ0-010	STIFFENER	A1050P	1		T1
	9	RFP51191EJ0-009	STIFFENER	SUS304	1		T1,L=1135
	8	RFP51191EJ0-008	DUAL_LOCK,FASTENER	ASSY	3		3M,SJ-3550 L=200(DUAL TAPE)
	7	RFP51191EJ0-007	DUAL_LOCK,FASTENER	ASSY	3		3M,SJ-3551 L=200(DUAL TAPE)
	6	RFP51191EJ0-006	RUBBER,SECTION	ASSY	1		RFP51011ANO,L=4600
	5	RFP51191EJ0-005	SEAT,TAP	SUS304	1		PL T3x150x80
	4	RS60607-098S	SCREW,F.H	SUS304	10		M4x14
	3	RFP51191EJ0-003	NUTSERT	SUS304	10		M4
	2	RFP51201EJ0	PANEL,BLIND WINDOW,B	ASSY	1		
	1	RFP51191EJ0-001	PANEL	FRP	1		T2.5

승인 APP	설계 DGN	검도 CHK	승인 APP
JeongYul Lee 2014.10.16	HeonUk Lee 2014.10.16	KeongBong Park 2014.10.16	HeeSook Jeong 2014.10.16

재질 MAT'L ASSY
중량 G.W
일반공차 MC B / VO B / CT B
SIZE A1

TITLE: WINDOW,MASK,TYPE GG

도면 번호 DRG. NO: RFP51191EJ0 (MS) Ver. 00 Rev. -A
SCALE 1/8 SHEET 1 of 1

RSD1402 RFP- 난-PRJT 참리번호 CATIA

기호 MARK	일자 DATE	내용 DETAIL OF REVISION(E.C ZONE)	설변번호 E.C NO.	설계 DGN	검도 CHK	승인 APP
Ax3	2014.12.18	ADDED PART NO.#13 & DIMENSION	RSD1402-U071	H.U.LEE	K.B.PARK	J.Y.LEE

참고번호 REF. NO.

HYUNDAI Rotem 현대로템주식회사

본 도면은 당사 재산으로써 당사의 허락없이 복제,배포 금지됨. PROPERTY OF ISSUING ENTITY. CANNOT BE DISTRIBUTED OR REPRODUCED WITHOUT AUTHORIZATION.

일반공차 GENERAL TOLERANCE			
절삭가공 MACHINING			
기호 CHARACTER	A	B	C
가공 치수에 대한 허용차 (±)			
~ 6	0.05	0.1	0.2
~ 30	0.1	0.2	0.5
~ 120	0.15	0.3	0.8
~ 315	0.2	0.5	1.2
~ 1M	0.3	0.8	2.0
~ 2M	0.5	1.2	3.0
~ 4M	0.8	2.0	4.0
~ 8M	-	3.0	5.0
~ 12M	-	4.0	6.0
~ 15M	-	5.0	7.0
~ 20M	-	6.0	8.0
용접 구조물 WELDING (±)			
기호 CHARACTER	A	B	C
~ 3	0.5	1	
~ 6	1	1.5	
~ 30	1	2	3
~ 120	1	2	3
~ 315	1	2	4
~ 1M	2	3	6
~ 2M	3	4	8
~ 4M	4	6	11
~ 8M	5	8	14
~ 12M	6	10	18
~ 15M	7	12	21
~ 20M	8	14	24
주조, 주강품 CASTING (±)			
기호 CHARACTER	A	B	
~ 10	1	1.5	
~ 30	2	3	
~ 80	2	3	
~ 120	1.5	2	
~ 200	2	3	
~ 400	3	4	
~ 800	3	4	
~ 1600	4	5	
~ 3150	-	7	
단조품 FORGING (±)			
기호 CHARACTER	A	B	
~ 40	2	4	
~ 80	2	3	
~ 120	1.5	2	
~ 200	2	3	
~ 400	3	4	
~ 800	4	5	
~ 1600	5	8	
~ 3150	7	12	